PRODUCT SPECIFICATION

30656
PEGASI M BASIN MIXER SET 250

FEATURES

- WELS 5* 6 lpm
- Reach 250 mm
- 2 stage flow step valve
- Includes Logikit™ body
- Recessed aerator
- WELS registration number T41005
- To upgrade to the No Pin Handle, order either 34380 smooth, 34381 knurled or 34390 fluted handle along with this mixer and we will supply assembled

BIM CONTENT
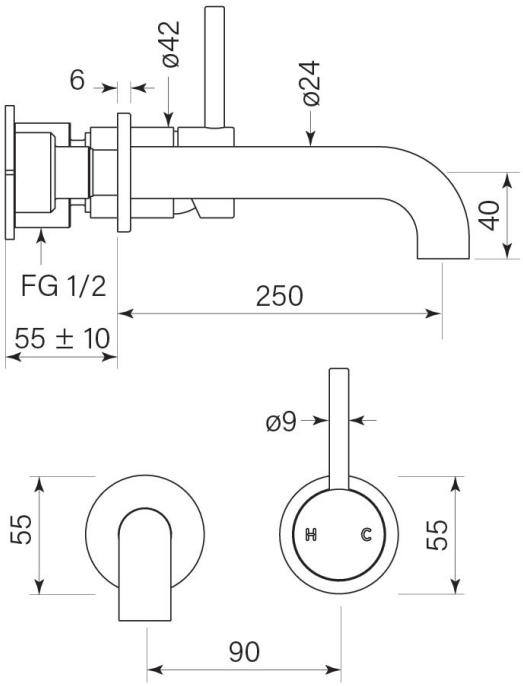
AUSTRALIAN MADE