PRODUCT SPECIFICATION

40080
CASCADE TOILET ROLL HOLDER

FEATURES
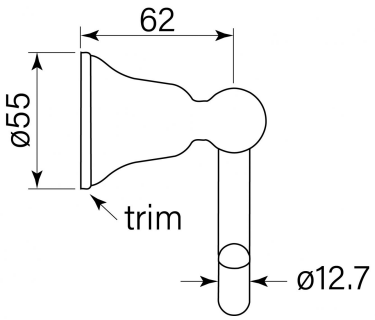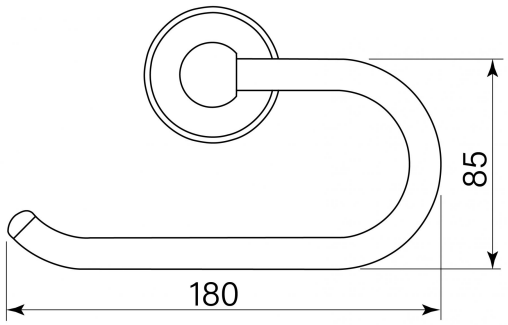
- Robust solid brass mount
- Swivel stirrup
- Fits one toilet roll
- Reverse orientation on request